INDEVA®

INTELLIGENT DEVICES FOR HANDLING

LIFTRONIC® AIR

Liftronic® series

LIFTRONIC® AIR

Introduction

Liftronic Air is an Intelligent Assist Device of the INDEVA® Liftronic® Series

It combines the strength of a traditional pneumatic parallelogram arm with the intelligence of an INDEVA®.

Its power for lifting is pneumatic, but it is electronically controlled.

Scope of application: it is suitable for handling offset and/or very heavy loads.
Models are available from 80 to 250 kg, that can be supplied either **column, ceiling or overhead rail mounted.**

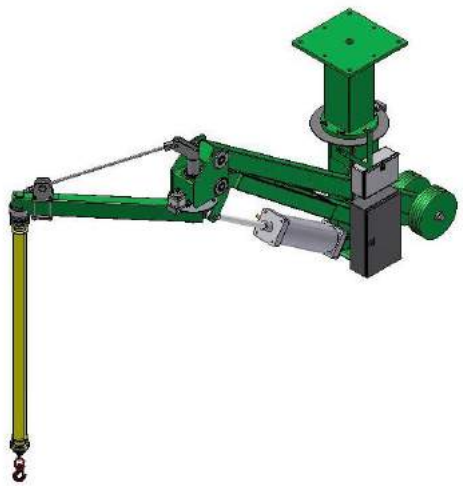

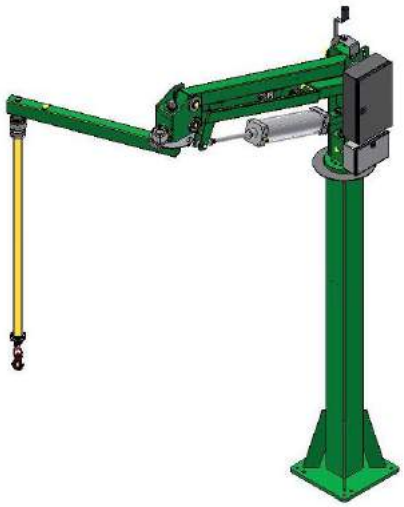

Compared to a traditional manipulator with pneumatic control, Liftronic® Air offers important advantages which help improve safety, ergonomics and productivity.

Electronic control of the pneumatic balancing circuits has multiple benefits:

- Auto weight sensing
- Efficient use and delivery of air
- Precise movement of the load
- Photocell arming offering safe control of the system
- Touch sensitive handle giving fingertip controlled movement
- Safety in the event of sudden loss of load
- Speed of use and control

Many workers having to perform material handling tasks with a pneumatic manipulator complain that it is slow to respond and heavy to use.

These concerns are addressed in the design of the Liftronic® Air: it features fine control and immediate responsiveness the same as all intelligent assist devices of the INDEVA® Liftronic® family. The electronic control allows for smaller pneumatic circuits and for more compact gripping tools, thus providing greater manoeuvrability and visibility.

LIFTRONIC® AIR vs. PNEUMATIC MANIPULATOR

LIFTRONIC® AIR	PNEUMATIC MANIPULATOR
SAFETY	
Total	**Limited**
If a load is lost, the controls immediately balance the system so removing the risk of sudden upward movement of the controls and tooling.	Only mechanical or pneumatic devices available. Vertical movement especially is difficult to control.
AUTO WEIGHT SENSE & LOAD BALANCING IN REAL TIME	
Standard feature	**Not possible in real time**
By means of a load cell and electronic signalling, the INDEVA® not only automatically balances the load weight in real time, but it also senses the load weight continually. The balance is adjusted accordingly allowing for very precise moves and load positioning.	The auto weight sense function is **not easy** to implement and is **not precise**. Usually, load balancing is carried out manually by means of a pressure regulator or selector; Counter balancing is much slower because it takes longer for pneumatic signalling (by compressed air) to travel around the circuits than an electronic signal.
LOAD BALANCING ALONG THE WHOLE VERTICAL STROKE	
Constant	**Not constant**
Special sensors and electronic controls allow perfect balancing along the whole stroke.	The cylinder pressure does not react as quickly as the arm movement required by the operator.
VERTICAL MOVEMENTS	
Quick and effortless*	**Slower and more effort required**
Thanks to its special finger tip sensing handle, the INDEVA® reacts instantaneously to the operator's touch, thus providing fine control of up/down movements.	The restriction of air flow in and out of the cylinders gives a much slower movement than the operator expects.

***The effort required for lifting or lowering a load of any weight is equal to 0, 3 kg**

LIFTRONIC® AIR vs. PNEUMATIC MANIPULATOR

LIFTRONIC® AIR	PNEUMATIC MANIPULATOR
LOAD POSITIONING	
Very precise	**Not precise**
The INDEVA® doesn't over-travel, nor bounce and doesn't require lots of small corrective movements to reach the required position; the load doesn't suffer any impact when positioned.	It requires lots of little corrective movements to reach the required position if load has to be placed in a restricted area. Load positioning implies an impact that may harm delicate loads.
VERSATILITY	
Simple and quick	**Difficult**
Modifications to movement parameters are **simple and quick** via electronic software.	Modifications to tooling functions are **difficult** and can result in **costly** upgrades by qualified technicians.
MAN / MACHINE INTERFACE	
Simple and efficient	**Complicated and with fewer functions**
By means of display.	By means of pneumatic lamps which are slow to react.
INTERFACE WITH OTHER MACHINES	
Simple and unlimited	**Complicated and limited**
Thanks to the INDEVA® electronic control, endless interfaces are possible.	By means of traditional means which allows for a limited scope application.
ELECTRONIC CYCLE COUNTER	
Different actions	**Only the total cycle**
It can be associated with **many different actions.**	**Only the total cycle** counter is available.
DIAGNOSTIC AND MAINTENANCE	
Simple	**Difficult**
Fault finding by means of microprocessor and remote service AppIndeva*[2].	Fault finding, especially for complex systems, is very **difficult.**

***[2] An advanced remote service system by Scaglia INDEVA®**

LIFTRONIC® AIR Case history:

Handling Metal crates in Aerospace Industry

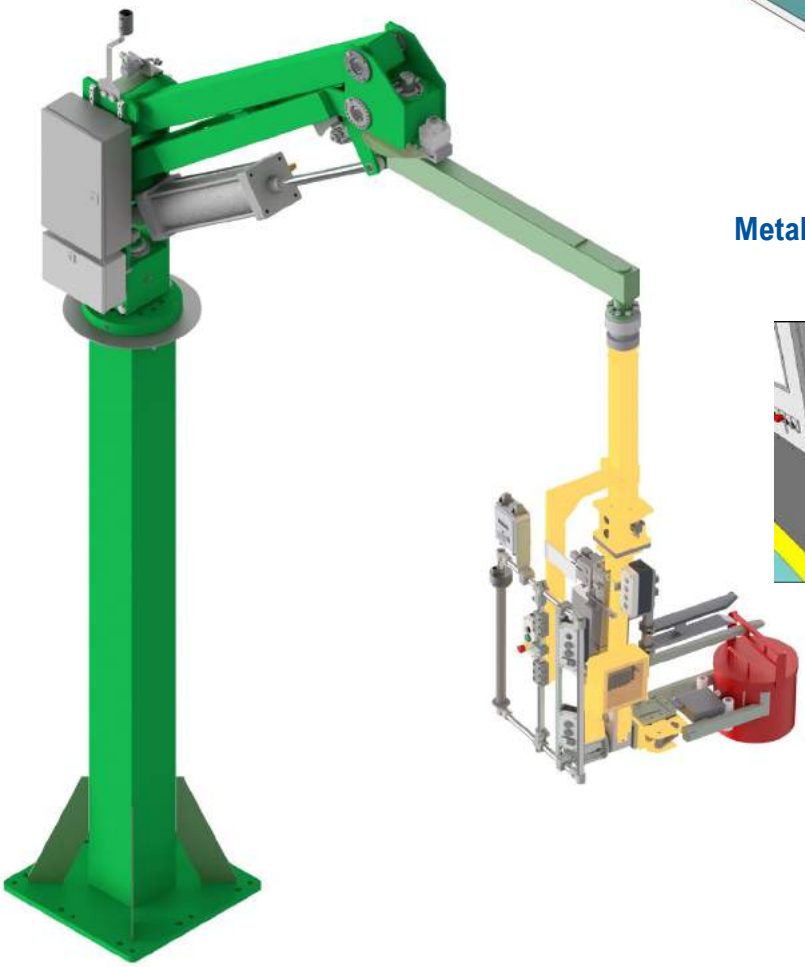

Metal crates must be moved and emptied at very high temperatures

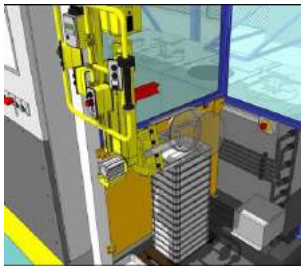

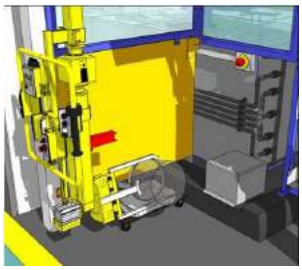

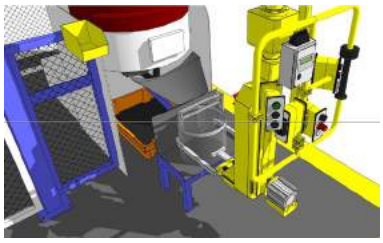

INDEVA® solution

Scaglia INDEVA® produced a custom solution taking into consideration all constraints present in the work cycle and the need to guarantee good ergonomics and safety for the workers.

A column mounted Liftronic® Air with tooling for handling and rotating offset crates.

The whole case history is at: www.indevagroup.com/news/manipulator-metal-crates-aerospace

LIFTRONIC® AIR

Case history: Manipulator for large trolleys

Handling large trolleys of different sizes with one Intelligent Lift Assist Device

A Company manufacturing trolleys for shop floor material handling needed a lift assist device for handling 46 different types of large trolleys at the sealing stage of their production line.

INDEVA® solution

A column mounted Liftronic® Air with custom gripping tool suitable for handling trolleys of different sizes, offering the following advantages:

- Liftronic® Air is auto weight sensing and auto balancing, thus making the task of handling trolleys with different weights easy and user friendly with no need of any adjustment.
- Liftronic® Air is very responsive allowing for smooth and natural movements.
- Liftronic® Air provides safety against load loss and against uncontrolled movements of the gripping tool.
- Ergonomic design.
- Liftronic® Air can handle heavy and bulky loads offset with ease and precision.
- Liftronic® Air's electronic control over the pneumatic circuits allows for efficient air consumption.

LIFTRONIC® AIR

Case history: Handling car dashboards

The Automotive industry chooses the latest technology for their assembly lines

Liftronic® Air has been chosen by large Companies in the Automotive industry because it is the latest technology for handling a car dashboard.
Liftronic® Air is an INDEVA® manipulator suitable for handling offset loads. It is as powerful as a traditional pneumatic manipulator but features fine movement control as all INDEVA® manipulators.

INDEVA® solution

Rail mounted Liftronic® Air with custom gripping tool.

The advantages of the Liftronic® Air compared to pneumatic manipulators traditionally used in car assembly lines are being recognized more and more by all leading manufacturers.

Scaglia INDEVA
Italy

Scaglia INDEVA SpA
Via Marconi, 42
24012 Val Brembilla (BG) Italy
Tel. +39 0345 59 411
Fax +39 0345 59 500
info@it.indevagroup.com
www.indevagroup.com

Scaglia INDEVA
Germany

Scaglia INDEVA GmbH
Esslinger Str. 26
D-73249 Wernau
Tel +49 (0) 7153 55049-0
Fax +49 (0) 7153 55049-69
info@de.indevagroup.com
www.indevagroup.com

Scaglia INDEVA
France

Scaglia INDEVA SARL
215 Rue Henry Barbusse
95100 Argenteuil
France
Téléphone: +33 (0) 1 39 19 30 30
Télécopieur: +33 (0) 1 39 19 63 24
info@fr.indevagroup.com
www.indevagroup.com

Scaglia INDEVA
United Kingdom

Scaglia INDEVA Ltd
Coney Green Business Centre, Clay Cross
Chesterfield, Derbyshire S45 9JW
Tel. +44 (0) 1246 25 23 33
Fax +44 (0) 1246 25 23 34
info@uk.indevagroup.com
www.indevagroup.co.uk

Scaglia INDEVA
Sweden

SCAGLIA INDEVA Nordic AB
Torbornavägen 24
253 68 Helsingborg, Sweden
Tel. + 46 (0) 424002460
info@se.indevagroup.com
www.indeva.se - www.indevagroup.com

SIT INDEVA
United States

SIT INDEVA Inc
3630 Green Park Circle
Charlotte, NC 28217
Tel. +1 704 357 8811
Fax +1 704 357 8866
info@sit-indeva.com
www.sit-indeva.com

SIT INDEVA
P.R. of China

SIT INDEVA (Shanghai) Ltd
Scaglia Indeva Division
Shanghai Nanhui Industrial Park
#2 Building, No 269 YuanZhong Rd. 201300
Tel. +86 (21) 5108 2206
Fax +86(21) 6486 3511
info@cn.indevagroup.com
www.indevagroup.cn