AUTOMATIC PALLETISING SYSTEMS

EN

smipal division




Automatic palletizing systems

» Smipal palletizing systems set a new standard in the scenario of robotized palletizers equipped with two Cartesian axes.
Smipal's APS series is the result of intense research and innovation, which has allowed us to implement technologically advanced systems that now offer each user the packaging solution best suited to his/her needs.
SMI palletizing systems are able to optimize the end-of-line operations of many industrial sectors: beverage production, agricultural and food, chemicals, pharmaceuticals, detergents, glass, paper and many others.
The APS series consists of automatic systems that palletize cardboard blanks, packets, trays, and packs in general.
By integrating the central column of all the system's main functions, Smipal's palletizing systems are extremely compact and easily adaptable to any logistic condition of the line end area, both in existing systems and in new installations.




SMI palletizing systems are able to optimize the end-of-line operations of many industrial sectors: beverage production, agricultural and food, chemicals, pharmaceuticals, detergents, glass, paper and many others.

» Fast and accurate operations

APS series palletizers are equipped with independent machine axes driven by electronically-controlled brushless motors, which ensure fast, smooth and accurate movements.
The use of this solution in the field of palletizing systems, characterized by repetitive actions, is a guarantee to achieve high reliability, reduce maintenance and ensure low running costs.

» Innovative technology and ease of use

Both automation and control on-board the machine rely on innovative technology based on Sercos fieldbus, through which the operator can quickly and easily manage all palletizing operations at the end of the line using a simple and user-friendly man-machine interface.
System management is made even easier by the use of advanced graphics, touch screens and a wide range of diagnostics and technical support available in real time.
The system's high degree of automation features low energy costs as well as low running and maintenance costs.

» Guaranteed strength and reliability

The accurate sizing of both the column and the horizontal beam, combined with their sliding on recirculating ball runners, ensure fluid and continuous movements with minimal dynamic buckling and virtually no vibrations: this is the key to ensuring a long lifecycle of the mechanical components.

» Maximum safety at all times

The range of Smipal APS series palletizers comes standard with a brand new dedicated "Safety PLC", which allows you to program the safety systems in a flexible, reliable and efficient manner.
The PLC monitors the proper operation of all the machine's safety devices, integrating them together.
It also allows the user to create custom protection areas within the perimeter of the palletizing system.
This significantly reduces machine downtime both in case of emergencies and when loading pallets, interlayer pads, etc., thanks to differentiated logics for the various areas of intervention.
As such, maintenance is easier and any adjustment to future safety standards will be faster and safer as they will be upgraded directly via the PLC's program.

» Energy savings and reduced maintenance

Smipal APS palletizing systems easily fit into existing or newly installed packaging lines and are immediately operational. By integrating multiple functions into just a few operating units, these systems are assembled, pre-wired and tested at the factory before delivery, hence minimizing assembly and start-up at the customer's facility.
The system's high degree of automation, its mechanical simplicity, the use of robot-based components and its structural optimization allow a significant cut in maintenance costs and reduction in energy consumption, as well as the extension of the system's life cycle.

» Low transportation costs

The single-column module fits easily inside a standard 20' container, which reduces transportation and storage costs and simplifies shipping paperwork. Each module is assembled, pre-wired and tested in Smipal's departments before delivery, which simplifies and quickens assembly and start-up at the customer's facility.

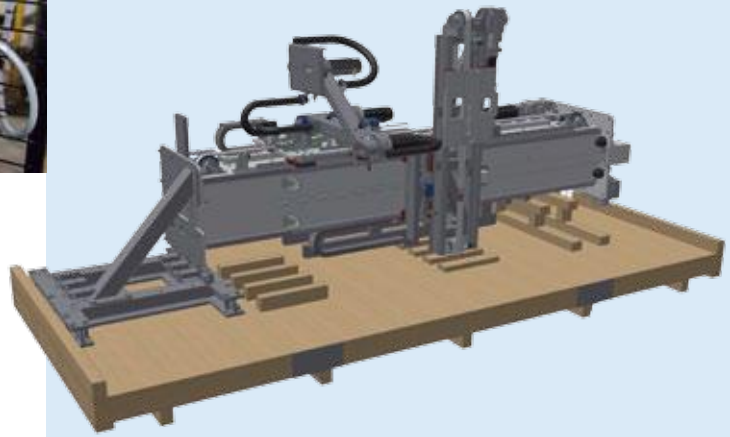

	FEATURES	SPEED*
APS 1035	BASIC OPERATIONS	35 PPM 100 LPH
APS 1035 P	BASIC OPERATIONS INTERLAYER PADS INSERTER	35 PPM 100 LPH
APS 1550 P	3-IN-1 FUNCTIONAL UNIT SCARA TECHNOLOGY PACKBLOC OPTION	50 PPM 150 LPH
APS 3090 P	3-IN-1 FUNCTIONAL UNIT SCARA TECHNOLOGY	90 PPM 300 LPH
APS 3100 LP	PRE-COMPOSITION IN LINE 3-IN-1 FUNCTIONAL UNIT SCARA TECHNOLOGY PACKBLOC OPTION	100 PPM 300 LPH

*Max speed refers to pattern layer 21, 3x2 packs, 1.5 L bottles.
(PPM: packs per minute - LPH: layers per hour)

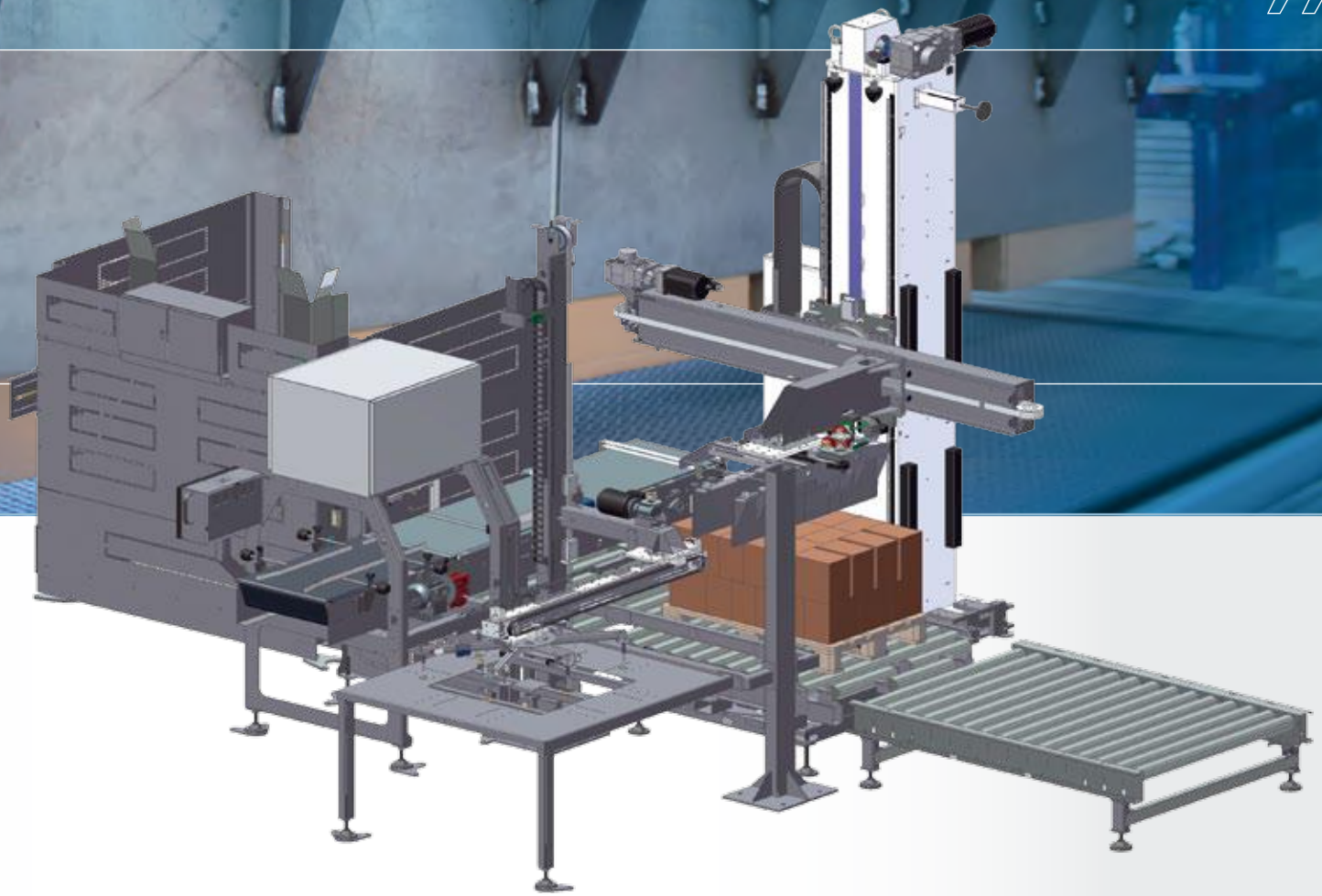

UP TO 35 PPM*

» Fixed column with gripper

The APS 1035 is made up of a single-column palletizing system with two Cartesian axes, with bottom-up movements.

The vertical axis consists of a fixed column on which the horizontal beam slides on recirculating ball guides; the gripper slides horizontally on said beam, always on recirculating ball guides.

The gripper picks up the rows of packs from a conveyor belt at operator height and places them on the pallet by means of fast and accurate movements.

The beam's vertical movements and the horizontal ones of the gripper-holder are driven by brushless motors, which ensure perfect trajectories during all palletizing phases.

» Grouping of packets and row/layer pre-composition

Packs arriving on the single-lane infeed belt are grouped in the row pre-composition area and queued in one line, facing the same direction (all are fed either on the long side or on the short side), therefore creating the palletizing row that, formed in this manner, is taken from the gripper and placed on the pallet.

If required by the palletizing pattern, a turntable rotates the pallet by 90° to change the row's direction.

» Composing the layer on the pallet

The gripper picks up the row of packs from the conveyor belt (located at operator height) and places it on the pallet in the specific point by means of fast and accurate movements.

The beam's vertical movements and the gripper-holder's horizontal movements are driven by brushless motors, which ensure perfect trajectories during all palletizing phases.

*Max speed refers to pattern layer 21, 3x2 packs, 1.5 L bottles.
(PPM: packs per minute - LPH: layers per hour)

Standard configuration

All the modules featuring the APS palletizing systems are designed according to FCR (Full Cost Reduction) methodologies, tested at Smipal and supplied to the customer fully assembled and wired.

» Single-row entry with simple pre-composition

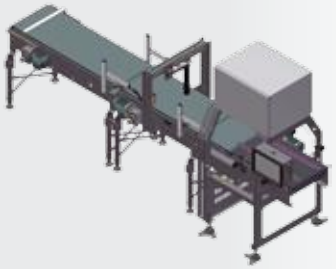

This single-entry layer-composition system is equipped with a double rubber-coated cadencing belt and a product insertion belt the task of which is to form the row/layer.

» Fixed column with gripper

This single column has two Cartesian axes, along which the horizontal beam slides up and down on ball recirculation guides.

The gripper slides horizontally on said beam, also on ball recirculation guides.

The gripper picks up the row of packs from a conveyor belt at operator height and places it, by means of fast and accurate movements, onto the pallet in the specific point.

The vertical and horizontal movements are driven by brushless motors, which ensure perfect trajectories during all palletizing phases.

» Pallet magazine

Adjustable fork magazine for empty pallets featuring the:

1) loading of the pallets into the magazine in both directions;

2) releasing of the pallet to the line, both from the front and from the side (on the right and the left) for extreme layout flexibility.

It is normally combined with a longer roller or chain conveyor (depending on the pallet's loading and releasing direction).

Storage capacity: 12 pallets of standard height (europallet = 144 mm).

» Pallet roller conveyor

This is a galvanized steel structure with ø 76-mm rollers and 150-mm pitch, motor driven by a 5/8" chain.

Electronically reversible central motorization. Available in different lengths: 1500 mm, 2000 mm, 2500 mm and 3000 mm.

» Pad and pad-inserter magazine

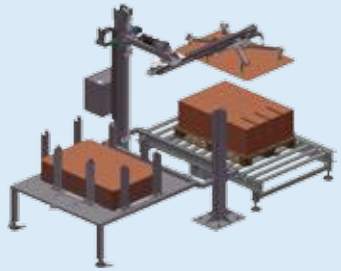

This pad magazine can be adjusted according to the various sizes of the interlayer pads.

This pad-inserter unit with controlled axes (brushless) is made up of a fixed column equipped with a translating arm that lifts vertically.

Suction cups grasping system through from 4 to 8 adjustable points to ensure the proper lifting of any type of interlayer pad.

APS 1550P

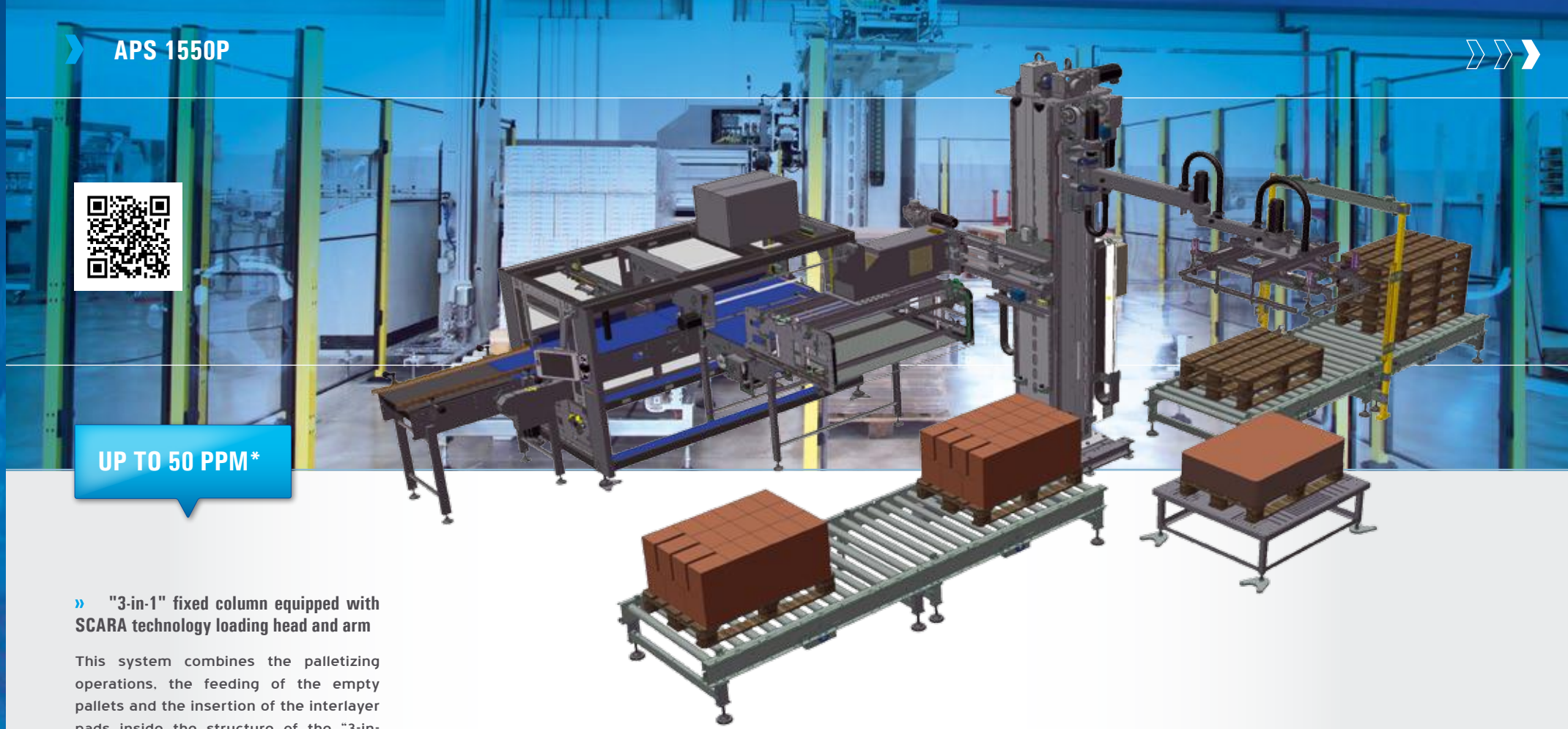

UP TO 50 PPM*

» "3-in-1" fixed column equipped with SCARA technology loading head and arm

This system combines the palletizing operations, the feeding of the empty pallets and the insertion of the interlayer pads inside the structure of the "3-in-1" central column: i.e. three processes usually carried out by separate machines within their own dedicated spaces.
The integration of these three functions inside the central column is made possible by a series of technical innovations devised by SMI design engineers.
Specifically, the horizontal beam on which the layer loading head slides is equipped with a telescopic guide system that allows the beam to move faster on its own transverse axis. In this way, the side of the column that remains clear when the packs are inserted into the loading head is exploited by the Smipal system for housing the mechanical assembly fitted with SCARA technology, which manages pallet flow and interlayer pad insertion.
This assembly essentially consists of an articulated horizontal arm that mounts, at its far end, both a gripper to pick up the pallets and a suction cup-grasping unit to move the cardboard interlayer pads.
The arm slides up and down in the central column in order to pick up and release the pallets and interlayer pads, and then it slides horizontally to transfer the pallets and interlayers from their magazines to the palletizing pallet.

» High operational reliability and compact size

The operations of the SCARA arm are handled by the machine's automation and control system in perfect synch with the operations performed by the layer-loading head, so that the vertical and horizontal movements of the various mechanical units moving on the central column can follow precise and coordinated trajectories that prevent any contact or interference between one another.

Smipal's APS automatic palletizing system offers all the advantages of Cartesian axes technology but with reduced machine overall dimensions as compared to traditional solutions.

*Max speed refers to pattern layer 21, 3x2 packs, 1.5 L bottles.
(PPM: packs per minute - LPH: layers per hour)

Standard configuration

» Grouping of packets and row/layer pre-composition

The infeed section is equipped with a layer pre-composition system consisting of a "jamming" pack-rotation device and a row formation belt.
Through this system, the packs are rotated before the row is formed.
There is also an optional pack-rotation device made up of an innovative conveyor belt featuring a loose ball mat that, when foreseen by the palletizing pattern, rotates at the bottom of the transiting pack.
This option allows you to reduce mishaps related to "jamming" type pack-turning units.

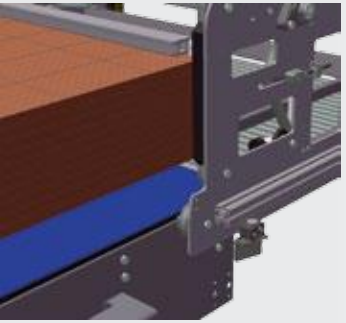

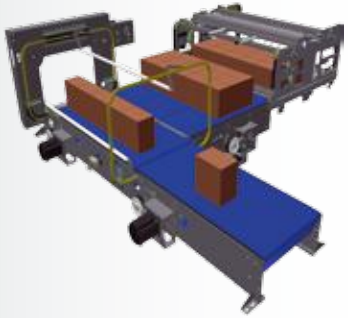

» Composing the layer on the pallet

This stage of the palletizing process composes a row of packs which is later moved, by means of a loose bar, onto a layer-composing "parking" belt, awaiting the subsequent rows.
From here, a conveyor belt gently introduces the complete layer into the loading head, the so-called "basket", which finally transfers it to the pallet being formed.
This configuration allows the arranging of almost 4 layers in sequence and within a very limited space (one partially formed, one "parked", one on the loading head and the last one on the pallet), thus ensuring greater system efficiency.

All the modules featuring the APS palletizing systems are designed according to FCR (Full Cost Reduction) methodologies, tested at Smipal and supplied to the customer fully assembled and wired.

» Single infeed

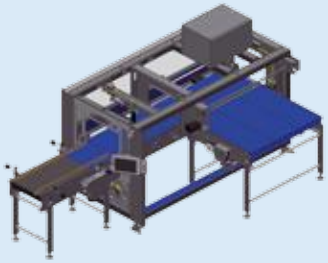

This single-infeed layer composition system comes with a rubber-coated cadencing belt, a product-insertion belt the task of which is to form the row, and a one-way translation system that contributes to the formation of the layer.

The layer is transferred from the belt to the basket smoothly and precisely as it exploits the belt's movement, and does not require the use of any mechanical layer translation components.

» "3-in-1" fixed column equipped with SCARA technology loading head and arm

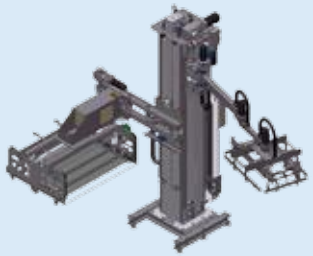

The "3-in-1" fixed column houses the mechanical parts designed to carry out the palletizing operations, feed the empty pallets and insert the interlayer pads, i.e. three processes usually carried out by separate machines within their own dedicated spaces.

The horizontal beam on which the layer loading head slides is equipped with a telescopic guide system that allows the beam to move faster on its own transverse axis while the SCARA articulated arm integrates the functions related to the feeding of the empty pallets and the insertion of the interlayer pads.

» Empty pallets feeding system

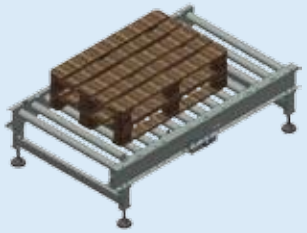

The APS palletizer is equipped with a system that feeds the empty pallets, and is made up of roller or chain conveyors (depending on the pallet's loading and releasing direction).
Storage capacity: about 10 pallets for a total max height of 1700 mm.

» Interlayer pad feeding system

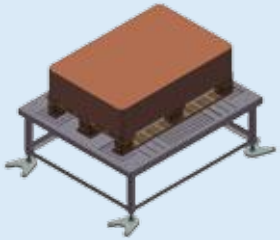

Pad feeding system adjusted according to different interlayer pad sizes.
This controlled-axes pad-inserting unit (depending on the chosen palletizing system) is built into the central column of the APS palletizer. Suction cup-grasping system with 4 to 8 adjustable points, to ensure the proper lifting of any type of interlayer pad.

» Pallet roller conveyor

This is a galvanized steel structure with ø 76-mm rollers and 150-mm pitch, motor driven by a 5/8" chain.
Electronically reversible central motorization. Available in different lengths: 1500 mm, 2000 mm, 2500 mm and 3000 mm.

APS 3090P

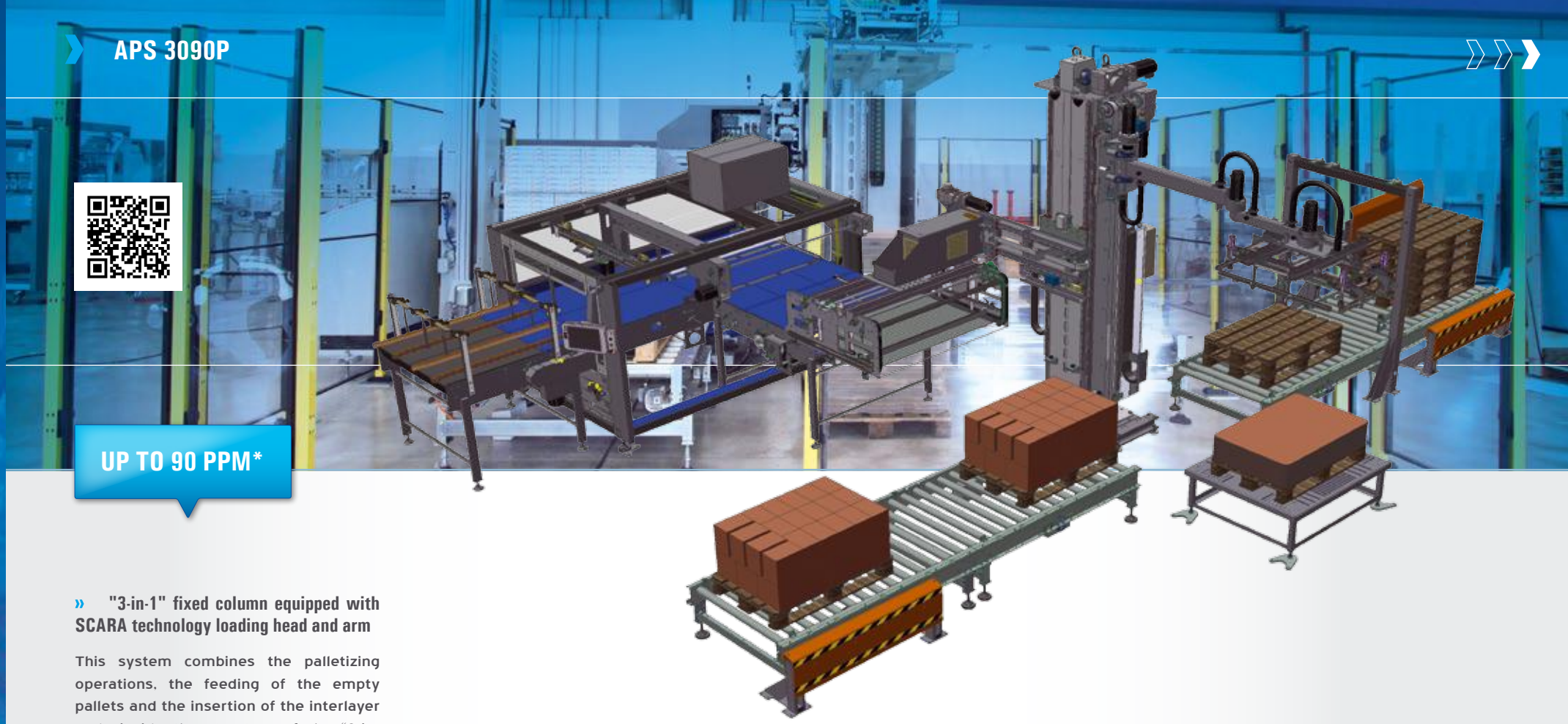

UP TO 90 PPM*

» "3-in-1" fixed column equipped with SCARA technology loading head and arm

This system combines the palletizing operations, the feeding of the empty pallets and the insertion of the interlayer pads inside the structure of the "3-in-1" central column: i.e. three processes usually carried out by separate machines within their own dedicated spaces.
The integration of these three functions inside the central column is made possible by a series of technical innovations devised by SMI design engineers.
Specifically, the horizontal beam on which the layer loading head slides is equipped with a telescopic guide system that allows the beam to move faster on its own transverse axis. In this way, the side of the column that remains clear when the packs are inserted into the loading head is exploited by the Smipal system for housing the mechanical assembly fitted with SCARA technology, which manages pallet flow and interlayer pad insertion.
This assembly essentially consists of an articulated horizontal arm that mounts, at its far end, both a gripper to pick up the pallets and a suction cup-grasping unit to move the cardboard interlayer pads.
The arm slides up and down in the central column in order to pick up and release the pallets and interlayer pads, and then it slides horizontally to transfer the pallets and interlayers from their magazines to the palletizing pallet.

» High operational reliability and compact size

The operations of the SCARA arm are handled by the machine's automation and control system in perfect synch with the operations performed by the layer-loading head, so that the vertical and horizontal movements of the various mechanical units moving on the central column can follow precise and coordinated trajectories that prevent any contact or interference between one another.

Smipal's APS automatic palletizing system offers all the advantages of Cartesian axes technology but with reduced machine overall dimensions as compared to traditional solutions.

*Max speed refers to pattern layer 21, 3x2 packs, 1.5 L bottles.
(PPM: packs per minute - LPH: layers per hour)

Standard configuration

» Grouping of packets and row/layer pre-composition

The infeed section is equipped with a layer pre-composition system consisting of a "jamming" pack-rotation device and a row formation belt.
Through this system, the packs are rotated before the row is formed.
There is also an optional pack-rotation device made up of an innovative conveyor belt featuring a loose ball mat that, when foreseen by the palletizing pattern, rotates at the bottom of the transiting pack.
This option allows you to reduce mishaps related to "jamming" type pack-turning units.

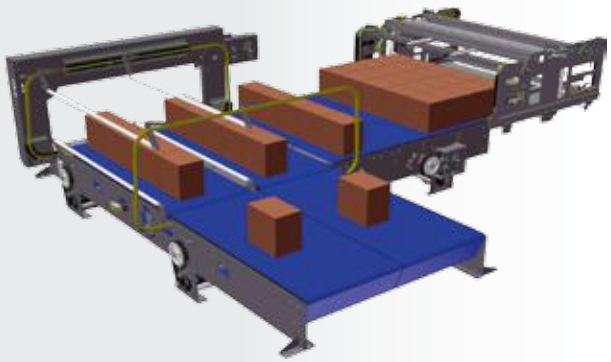

» Composing the layer on the pallet

This stage of the palletizing process composes a row of packs which is later moved, by means of a loose bar, onto a layer-composing "parking" belt, awaiting the subsequent rows.
From here, a conveyor belt gently introduces the complete layer into the loading head, the so-called "basket", which finally transfers it to the pallet being formed.
This configuration allows the arranging of almost 4 layers in sequence and within a very limited space (one partially formed, one "parked", one on the loading head and the last one on the pallet), thus ensuring greater system efficiency.

All the modules featuring the APS palletizing systems are designed according to FCR (Full Cost Reduction) methodologies, tested at Smipal and supplied to the customer fully assembled and wired.

» Double infeed

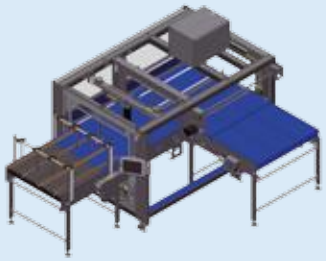

This double-infeed layer composition system comes with two rubber-coated cadencing belts, two product-insertion belts the task of which is to form the row and a one-way translation system that contributes to the formation of the layer. The layer is transferred from the belt to the basket smoothly and precisely as it exploits the belt's movement, and does not require the use of any mechanical layer translation components.

» "3-in-1" fixed column equipped with SCARA technology loading head and arm

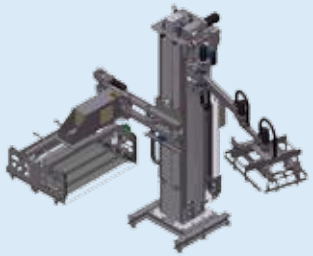

The "3-in-1" fixed column houses the mechanical parts designed to carry out the palletizing operations, feed the empty pallets and insert the interlayer pads, i.e. three processes usually carried out by separate machines within their own dedicated spaces.

The horizontal beam on which the layer loading head slides is equipped with a telescopic guide system that allows the beam to move faster on its own transverse axis while the SCARA articulated arm integrates the functions related to the feeding of the empty pallets and the insertion of the interlayer pads.

» Empty pallets feeding system

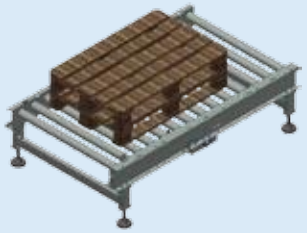

The APS palletizer is equipped with a system that feeds the empty pallets, and is made up of roller or chain conveyors (depending on the pallet's loading and releasing direction).
Storage capacity: about 10 pallets for a total max height of 1700 mm.

» Interlayer pad feeding system

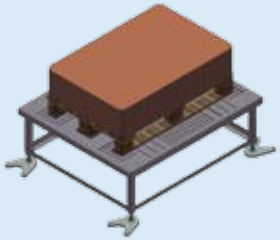

Pad feeding system adjusted according to different interlayer pad sizes.
This controlled-axes pad-inserting unit (depending on the chosen palletizing system) is built into the central column of the APS palletizer. Suction cup-grasping system with 4 to 8 adjustable points, to ensure the proper lifting of any type of interlayer pad.

» Pallet roller conveyor

This is a galvanized steel structure with ø 76-mm rollers and 150-mm pitch, motor driven by a 5/8" chain.
Electronically reversible central motorization. Available in different lengths: 1500 mm, 2000 mm, 2500 mm and 3000 mm.

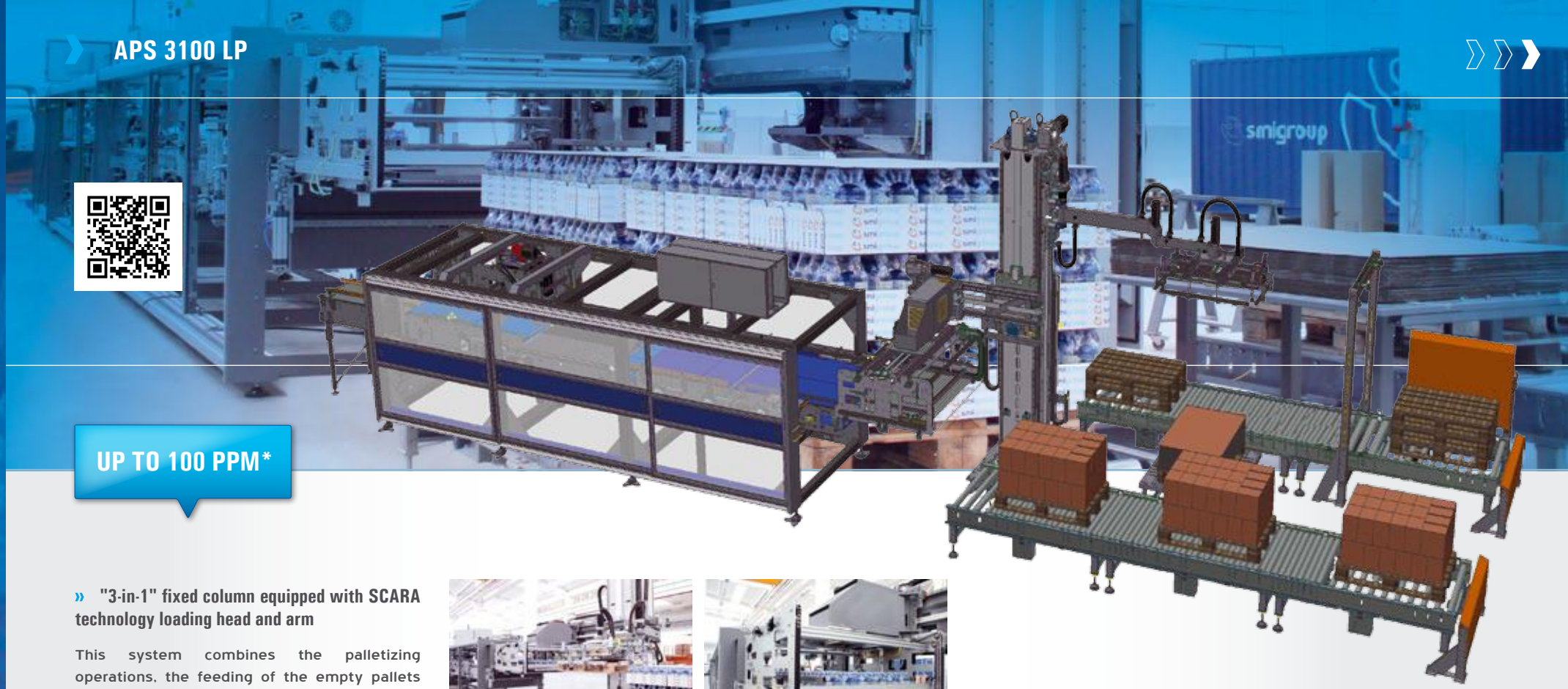

UP TO 100 PPM*

» "3-in-1" fixed column equipped with SCARA technology loading head and arm

This system combines the palletizing operations, the feeding of the empty pallets and the insertion of the interlayer pads inside the structure of the "3-in-1" central column: i.e. three processes usually carried out by separate machines within their own dedicated spaces.
The integration of these three functions inside the central column is made possible by a series of technical innovations devised by SMI design engineers.
Specifically, the horizontal beam on which the layer loading head slides is equipped with a telescopic guide system that allows the beam to move faster on its own transverse axis. In this way, the side of the column that remains clear when the packs are inserted into the loading head is exploited by the Smipal system for housing the mechanical assembly fitted with SCARA technology, which manages pallet flow and interlayer pad insertion.
This assembly essentially consists of an articulated horizontal arm that mounts, at its far end, both a gripper to pick up the pallets and a suction cup-grasping unit to move the cardboard interlayer pads.
The arm slides up and down in the central column in order to pick up and release the pallets and interlayer pads, and then it slides horizontally to transfer the pallets and interlayers from their magazines to the palletizing pallet.

» High operational reliability and compact size

The operations of the SCARA arm are handled by the machine's automation and control system in perfect synch with the operations performed by the layer-loading head, so that the vertical and horizontal movements of the various mechanical units moving on the central column can follow precise and coordinated trajectories that prevent any contact or interference between one another.

Smipal's APS automatic palletizing system offers all the advantages of Cartesian axes technology but with reduced machine overall dimensions as compared to traditional solutions.

*Max speed refers to pattern layer 21, 3x2 packs, 1.5 L bottles.
(PPM: packs per minute - LPH: layers per hour)

Standard configuration

All the modules featuring the APS palletizing systems are designed according to FCR (Full Cost Reduction) methodologies, tested at Smipal and supplied to the customer fully assembled and wired.

» Grouping of packets and row/layer pre-composition

This model is equipped with a continuous, in line layer pre-composition system.
The loose packets arriving on the infeed belt in a single row are turned or translated by means of an innovative "multi-row diverter" and then placed in multiple rows in the position foreseen by the palletizing pattern, hence pre-composing the layer. A suitable mechanical actuator separates the newly completed layer from the accumulating loose packets while the "multi-row diverter" prepares the next layer.

» Composing the layer on the pallet

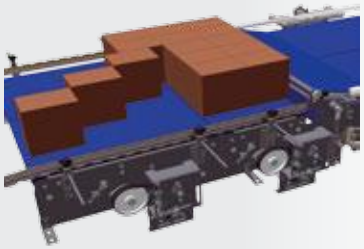

The layer of packs arriving from the mechanical separating actuator is inserted into the loading head (basket) smoothly and precisely as it exploits the belt's movement, and does not require the use of any mechanical layer translation components.
The entry with continuous pre-composition is very compact and allows the optimizing of space at the end of the line.
This system stands out from traditional ones due to its one-way motion and to the possibility of orienting the packets in any position.

» Entry with continuous pre-composition

Continuous layer-composition system: the loose packets arriving on the belt in a single row are turned or translated by means of an innovative "multi-row diverter" and then placed in multiple rows in the position foreseen by the palletizing pattern, hence pre-composing the layer. A suitable mechanical actuator separates the newly completed layer from the accumulating loose packets while the "multi-row diverter" prepares the next layer. The layer, composed in this manner, is inserted into the basket smoothly and precisely as it exploits the belt's movement, and does not require the use of any mechanical layer translation components. The entry with continuous pre-composition is very compact and allows the optimizing of space at the end of the line. This system differs from the traditional ones due to its one-way motion and to the possibility of orienting the packets in any position.

» "3-in-1" fixed column equipped with SCARA technology loading head and arm

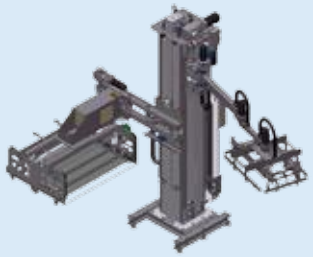

The "3-in-1" fixed column houses the mechanical parts designed to carry out the palletizing operations, feed the empty pallets and insert the interlayer pads, i.e. three processes usually carried out by separate machines within their own dedicated spaces. The horizontal beam on which the layer loading head slides is equipped with a telescopic guide system that allows the beam to move faster on its own transverse axis while the SCARA articulated arm integrates the functions related to the feeding of the empty pallets and the insertion of the interlayer pads.

» Empty pallets feeding system

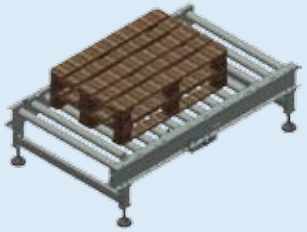

The APS palletizer is equipped with a system that feeds the empty pallets, and is made up of roller or chain conveyors (depending on the pallet's loading and releasing direction).Storage capacity: about 10 pallets for a total max height of 1700 mm.

» Interlayer pad feeding system

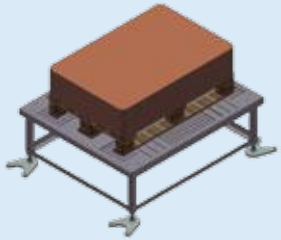

Pad feeding system adjusted according to different interlayer pad sizes. This controlled-axes pad-inserting unit (depending on the chosen palletizing system) is built into the central column of the APS palletizer. Suction cup-grasping system with 4 to 8 adjustable points, to ensure the proper lifting of any type of interlayer pad.

» Pallet roller conveyor

This is a galvanized steel structure with ø 76-mm rollers and 150-mm pitch, motor driven by a 5/8" chain. Electronically reversible central motorization. Available in different lengths: 1500 mm, 2000 mm, 2500 mm and 3000 mm.

Accessory devices

» Pallet chain conveyor

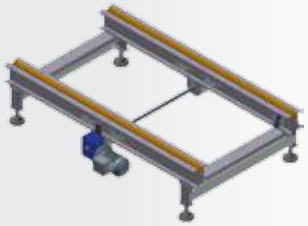

- Galvanized steel structure for pallet handling by means of 3 chains, ¾" pitch with 500-mm wheelbase, for optimal transfer in the non-rolling direction.
- Electronically reversible central motorization.
- Available in three different lengths: 1500 mm, 2000 mm and 3000 mm.

The system is tested at Smipal and delivered to the customer fully assembled and wired. This accessory is operated by the electrical panel of the central module of the APS palletizing system.

» Translating pallets on rollers/chains at 90°

- Galvanized steel structure.
- Mixed system of rollers and chains for the orthogonal deviation of the pallets with reversal of the advancing front.
- Electronically reversible central motorization.

The system is tested at Smipal and delivered to the customer fully assembled and wired. This accessory is operated by the electrical panel of the central module of the APS palletizing system.

» Pallet rotation

- Galvanized steel structure.
- Roller- or chain-fitted system for the rotation of the pallets while maintaining the advancing front.
- Electronically reversible central motorization.

The system is tested at Smipal and delivered to the customer fully assembled and wired.

This accessory is operated by the electrical panel of the APS palletizing system's central module.

» Pack rotation by conveyor belt featuring a loose ball mat

This optional pack-rotating device is made up of an innovative conveyor belt featuring a loose ball mat that, when foreseen by the palletizing pattern, rotates at the bottom of the transiting pack.
This option allows you to reduce mishaps related to "jamming" type pack-turning units.

» Pallet wrappers on turntables

This accessory device, built into the palletizer's structure, wraps the pallet in stretch film simultaneously with the composition of the layers on the pallet, thus eliminating the dead times typical of alternative wrapping solutions of the pallet when it is finished.

This solution is especially suited to the palletizing of unstable containers such as, for example, loose 5- to 10-liter bottles which, thanks to the wrapping of the individual layer, remain firmly in place on the pallet as it rotates and advances on the machine's conveyor belts.

Packbloc version

The APS palletizers are available in different configurations, both in the "standalone" version and integrated into a compact system called “Packbloc”.

The “Packbloc” system is an innovative line-end packaging solution which combines the secondary packaging and palletizing operations in one unit alone.

This solution overcomes the need for long connecting belts between the two machines and allows you to save on the initial investment and in energy, management and maintenance costs.

The typical configuration of a Packbloc system includes:

• a wrap-around case packer or a Smiflexi shrinkwrapper, possibly equipped with the “Easy-Load” accessory, for the automatic loading of the cardboard blank magazine, and a pack-ejection conveyor belt to manage machine downtime;

• a Smipal APS 1550P or 3100LP palletizer, featuring the innovative "3-in-1" system based on SCARA technology and possibly equipped with a built-in pallet-wrapper.

www.smigroup.it

SMI S.p.A. - Headquarters
Via Carlo Ceresa, 10
I-24015 San Giovanni Bianco (BG)
Tel.: +39 0345 40.111 - Fax: +39 0345 40.209
info@smigroup.it

DP010319